LC-4500
EXERCISE BIKE

GE09-00027-XXXX

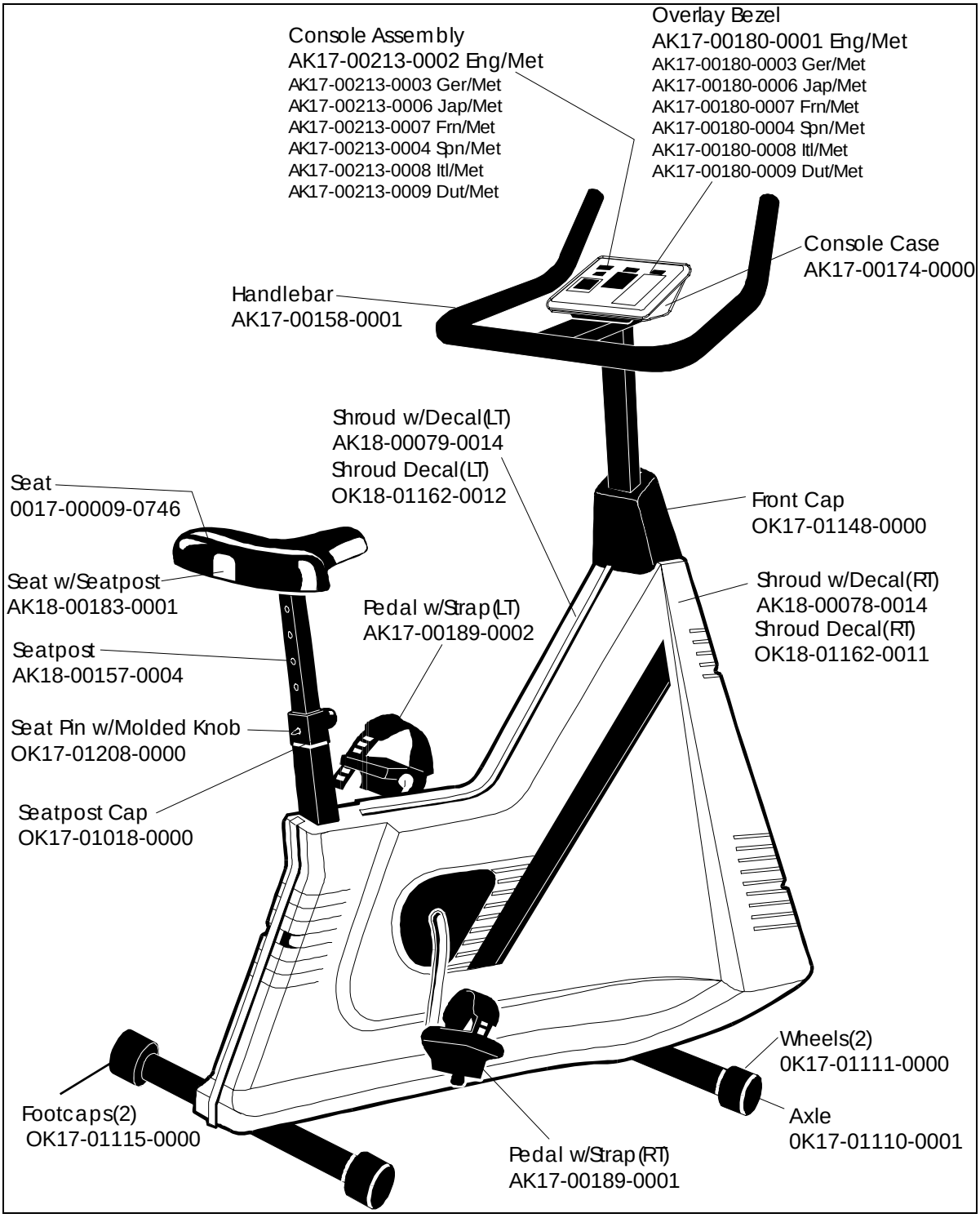

Revision Date: 8/12/98

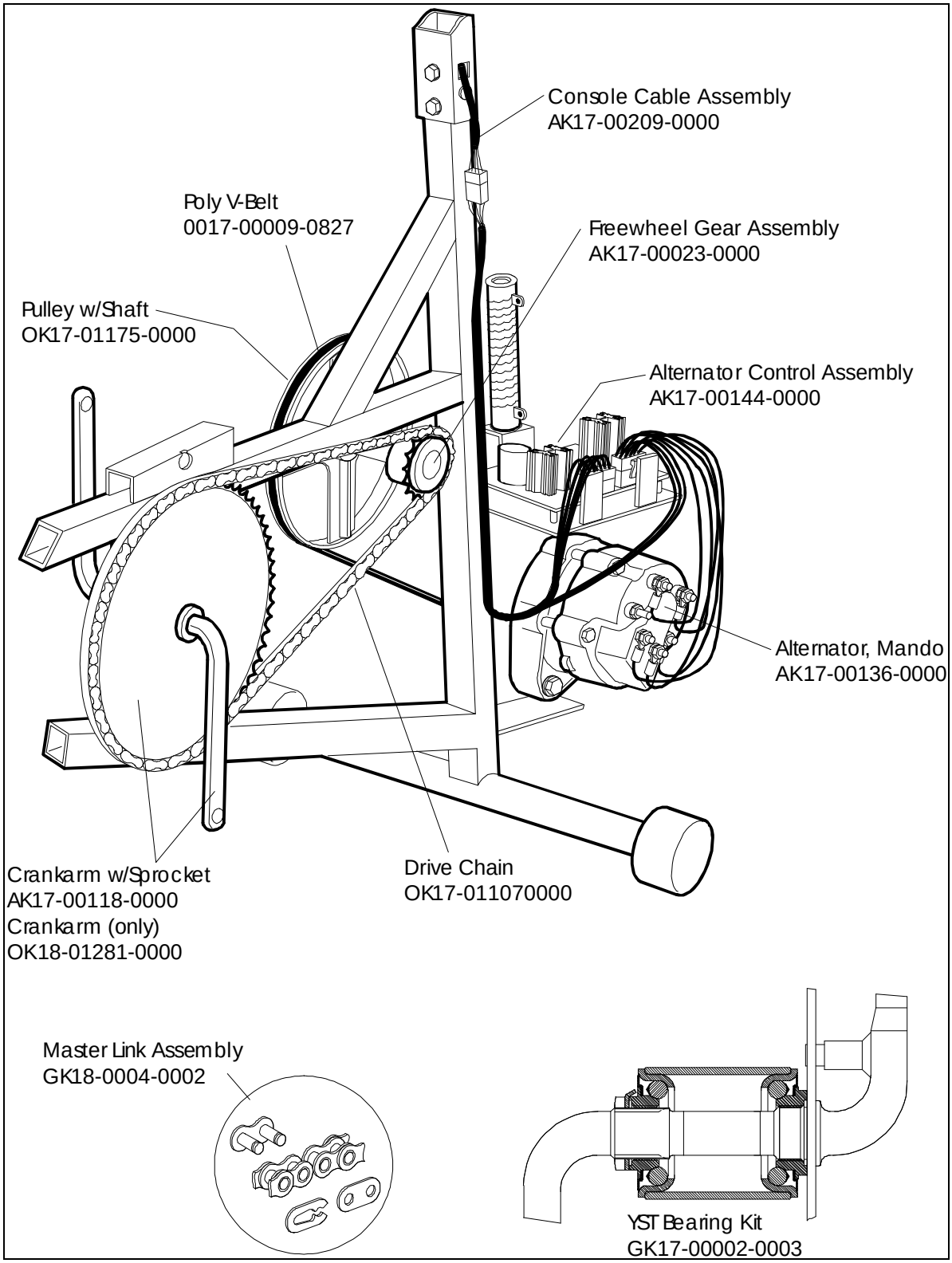
Console Cable Assembly
AK17-00209-0000
Poly V-Belt
0017-00009-0827
Freewheel Gear Assembly
AK17-00023-0000
Pulley w/Shaft
OK17-01175-0000
Alternator Control Assembly
AK17-00144-0000
Alternator, Mando
AK17-00136-0000
Crankarm w/Sprocket
AK17-00118-0000
Crankarm (only)
OK18-01281-0000
Drive Chain
OK17-011070000
Master Link Assembly
GK18-0004-0002
YST Bearing Kit
GK17-00002-0003